XEAMOS

Zero NOx

Reducing emissions together

Zero NOx

Xeamos solution for IMO Tier III marine propulsion and auxiliary engines

With all eyes focussed on the new Emission Control Area's that has come into force since January 2021, Xeamos has developed innovative and flexible solutions for SCR DeNox systems for marine applications. These systems have been based on our extensive experience since the first system was installed in 2011. Currently, our systems convert almost a half million kilograms of NOx to harmless nitrogen each year.

With Xeamos SCR systems any diesel engine can comply with the IMO Tier III NOx emission standard, or even better. Our systems can be designed with integrated sound attenuation and in any geometry as far as the laws of physics allow.

- More than 600.000 hrs of experience in exhaust emission reduction in the maritime industry
- Extensive experience with IMO III certification procedures. Holder of multiple certificates.
- Zero NOx systems can be applied in wet and dry exhaust systems, even if high back pressures can occur.
- Custom line SCR systems can be tailored for geometry, in- and outlet positions, sound attenuation and pressure drop.
- Intelligent PLC control ensures trouble free operation.
- Integrated sound attenuation, tuned for the specific engine model.

Main Features

- Standard or tailor made systems
- Integrated silencer
- Designed for harsh marine environments
- CFD and FEM aided design
- Suitable for sulphur containing fuels
- For up to 600°C exhaust gas temperature
- Actual urea flow measurement
- Lloyds Register SSC approved

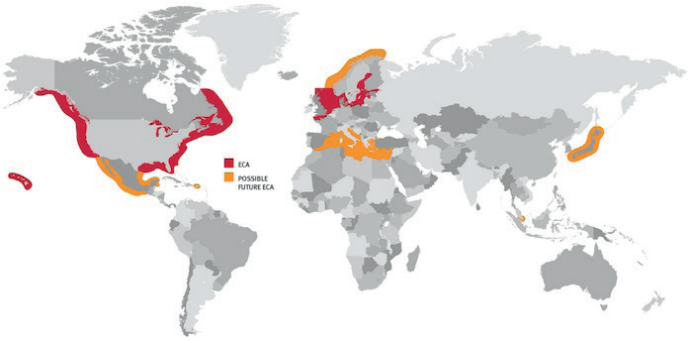

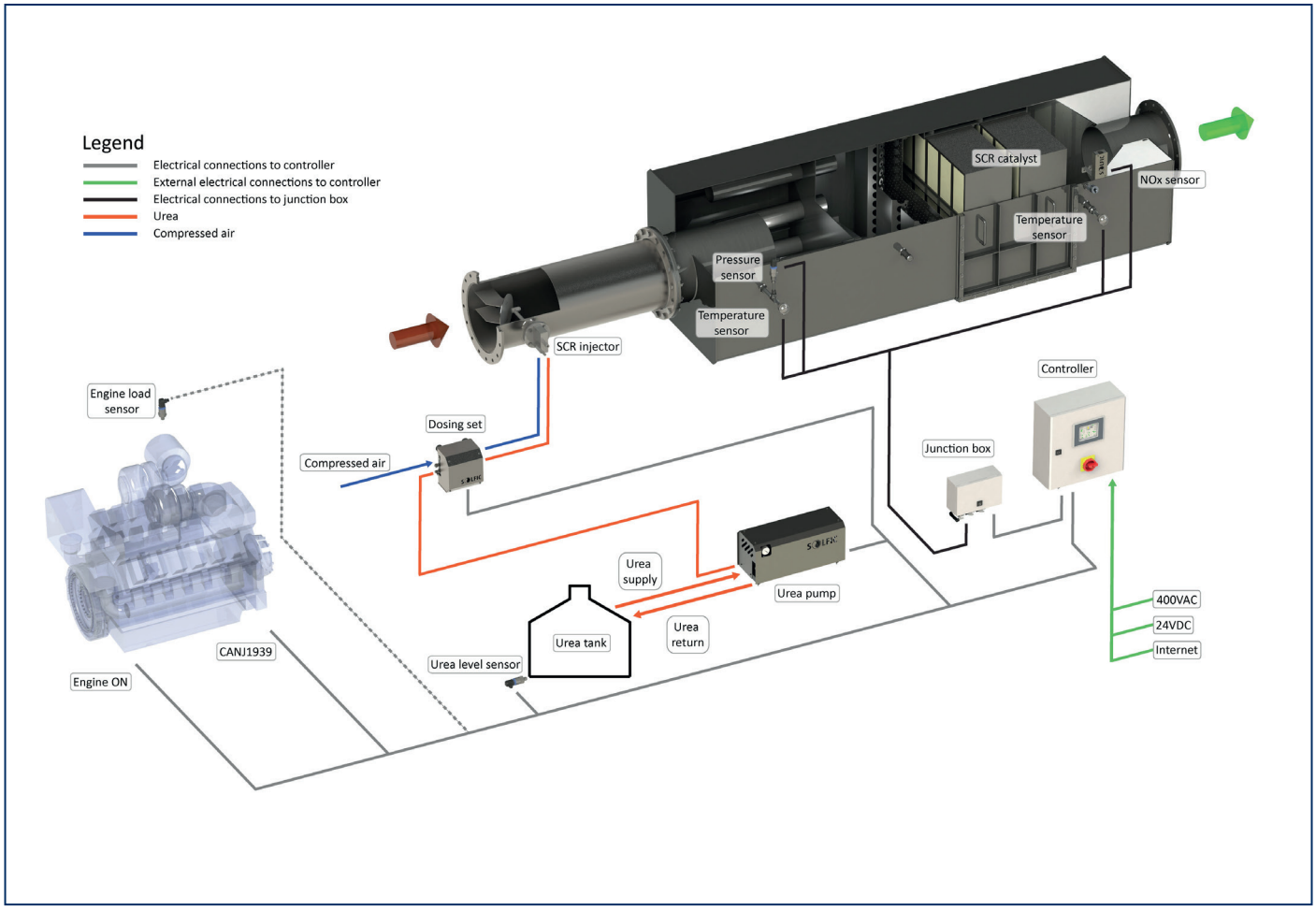

Lay-out of a standard Zero Nox system.

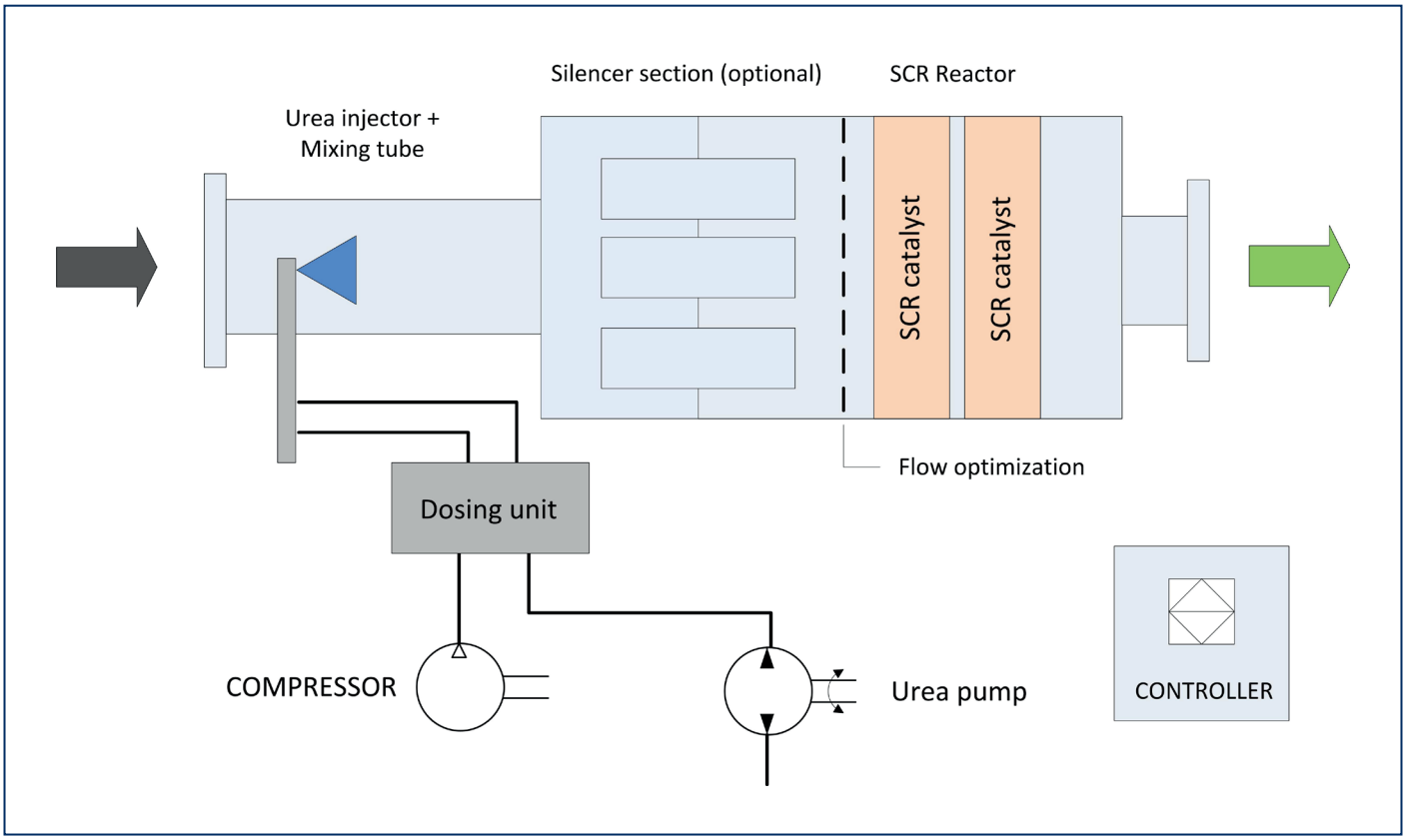

Process schematic of a Zero Nox system.

XEAMOS

Operational conditions

Application	EN590, MGO, MDO
Ambient Temperature	-20 + 55°C
Degree of Protection	IP55
Relative humidity	5 to 95% Non-condensing
Inspection & service interval	Approx. 1x per year (normal conditions)
Compressed air for urea atomizer	8-25 Nm3/h @ min. 6 barg
Urea nozzle type	2-phase nozzle, compressed air atomization
Urea specification	AUS32 or AUS40 or equivalent

Supplies

Fuel	EN590, MGO, MDO
AC Power supply	3 x 400 VAC (4 wire)
DC Power supply	24 VDC - 5A (uninterrupted)

Supplies

Materials Reactor	Housing: 16Mo3 (alt. SS) Mixing tube: SS
Surface treatment	No treatment or heat resistant primer
Max system pressure	Standard 100 mbar @ 520°C up to 500 mbar @ 600°C.
Pressure drop (ΔP)	Approx. 20-40 mbar,
SCR type	various types available
Emission reduction	Up to 97% depending on required reduction
Operational temperature	>220°C (EN590 fuel)
Control strategy	Closed loop with NOx sensor
Supports	Project specific
Thermal insulation	Project specific

Legal requirements and standards

Standards	EMC directive 2014/30/EU Machinery directive 2006/42/EC Low voltage directive 2014/35/EU Classification Lloyds Register

System parts

Controller	PLC with full colour HMI, marine standard (acc. to LR requirements) One controller cabinet is applied for up to three MPAT systems per engine room - Inputs: engine load, engine on - Outputs: System ON, Alarm, MOD bus - Data logging - Remote access prepared
Reactor Housing	Replaces silencer. Different height/width ratios. Compact or In-Line depending on available space Project specific support and positions of in-and outlet
Urea dosing unit	Controls urea and air flow
Urea pump set	Pressurizes urea. Can feed multiple dosing systems (one pump unit per engine room)
Urea injector	2-phase urea injector, air assisted
Sensors	Temperature & pressure transmitter
Wiring	Wiring by yard on terminals and connectors

Performance

NOx – Nitrogen oxides	> 80 - 97% reduction Standard: NOx out < 2,0 g/kWh Optional: NOx out < 0,4 g/kWh
Sound attenuation	35 or 45 dB(A)

Emission standards

As per January 1st 2016, the North American an US Caribbean coastal waters are designated NOx Emission Control Areas (NECA). This means that all vessels, with an exempt for recreational vessels below 500 GT or 24 m in length, have to comply with the IMO Tier III emission rules. These NOx emission requirements are laid down in the MARPOL (73/78) Annex VI regulation 13 (2008). Per January 2021 all recreational vessels above 24 m LOA need to comply with the IMO Tier III when sailing in a NECA as well.
At this date the North and Baltic sea are also designated NECA.
All this means that engines on board above 130 kW are not allowed to emit more than approx. 2 g/kWh NOx (high speed engines). This means a 75% reduction of NOx compared to the IMO Tier II standard. With diesel engines this emission level can only be reached by fitting an SCR system.

Certification

Xeamos has extensive experience with IMO Tier III certification and holds various IMO III certificates. Please contact us for more information.

Optional

- Remote access via LAN accessible for diagnostics/remote Services
- Alternative power supplies
- Single controller for each system in case of a two or three engines per engine room
- Alternative in- and outlet positions and flanges
- NOx sample unit for sulphur containing fuels

Phased installation

Based on the required emission reduction systems can be supplied in successive phases:

1. As a silencer replacement unit that is prepared for later installation of SCR catalyst blocks
2. As a complete SCR system

System selection

To configure your system we ask you to submit the following information.

Engine model and power	kW
Engine certification	IMO II / n.c./ …
Exhaust system	wet / dry
Available backpressure	mbar
Running hours per year	hours
Average engine load	%
Fuel type	EN590, DMA etc (specify max. sulphur content)

XEAMOS

Standard Zero NOx systems

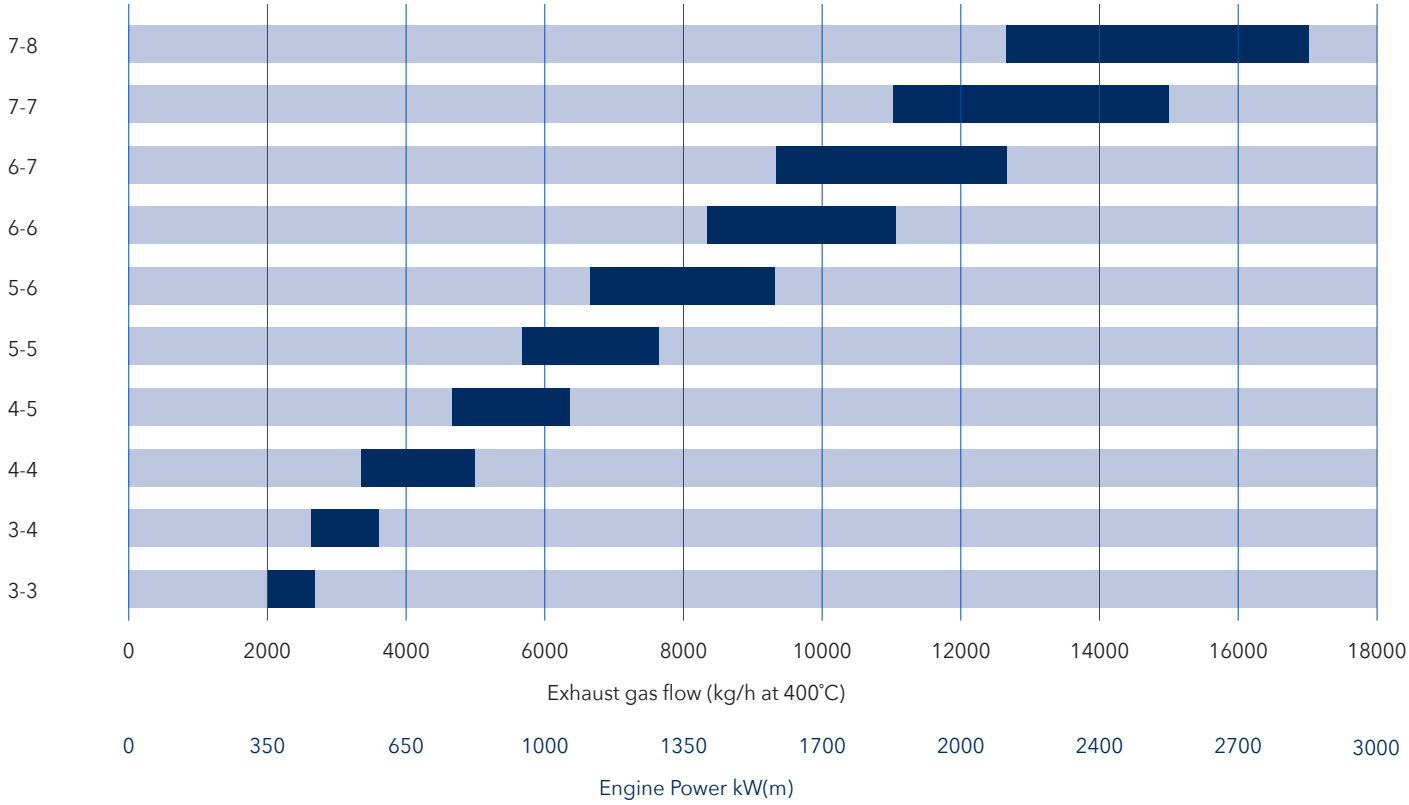

For indication only, please contact us for exact unit selection or custom solutions. Bars in graph correspond with 20-30 mbar pressure drop.

Custom SCR design – examples

The model on the left side is a so called H-configuration with an internal inlet manifold to position the inlet connection exactly above the engine.

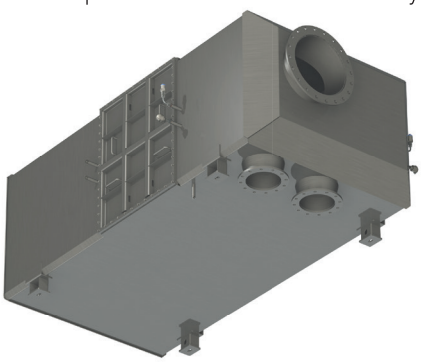

The model on the left side is a ultra-flat Z-configuration for smaller engine rooms.

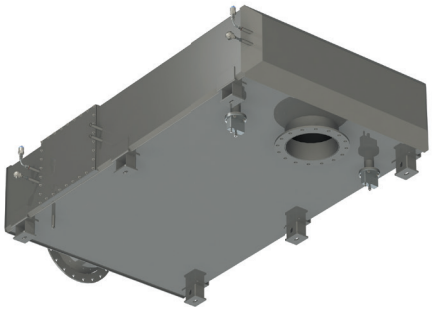

The model on the right side is also an H- configuration with four inlets for a specific engine model.

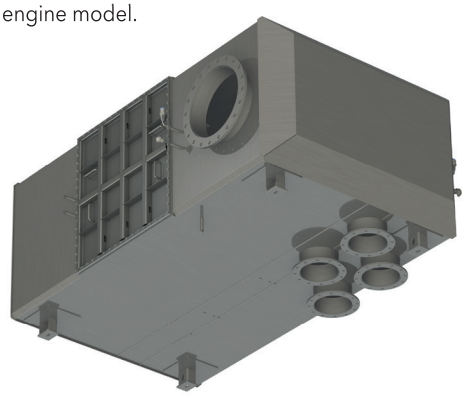

The model on the right side is a V- configuration that allows the unit to be higher than wider.

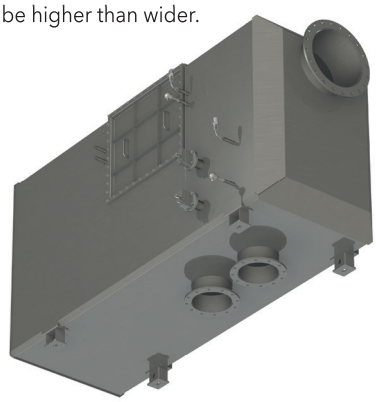

XEAMOS

Dimensions standard Zero NOx system

Type	SCR volume	Flanges EN1092 PN10		Hot surface (reactor)	L1	L2	H1	W1	I1	I2	O1	O2	Weight
	ltr	In	Out	m2	mm	mm	mm	mm	mm	mm	mm	mm	kg
3-3	140	DN250	DN250	1,9	600	3000	550	520	275	260	275	260	740
3-4	190	DN250	DN250	2,2	600	3000	550	680	275	340	275	340	850
4-4	250	DN300	DN300	3,6	950	3000	700	680	350	340	350	340	950
4-5	315	DN350	DN350	4,8	1200	3000	700	830	350	415	350	415	1050
5-5	395	DN400	DN400	6,5	1500	3000	850	830	425	415	425	415	1300
5-6	475	DN450	DN450	8,4	1850	3000	850	980	425	490	425	490	1450
6-6	570	DN450	DN450	9,3	1850	3200	1010	980	505	490	505	490	1680
6-7	660	DN500	DN500	11,5	2150	3200	1010	1140	505	570	505	570	1820
7-7	775	DN600	DN600	15,6	2800	3400	1170	1140	585	570	585	570	2170
7-8	880	DN600	DN600	16,9	2800	3400	1170	1300	585	650	585	650	2350

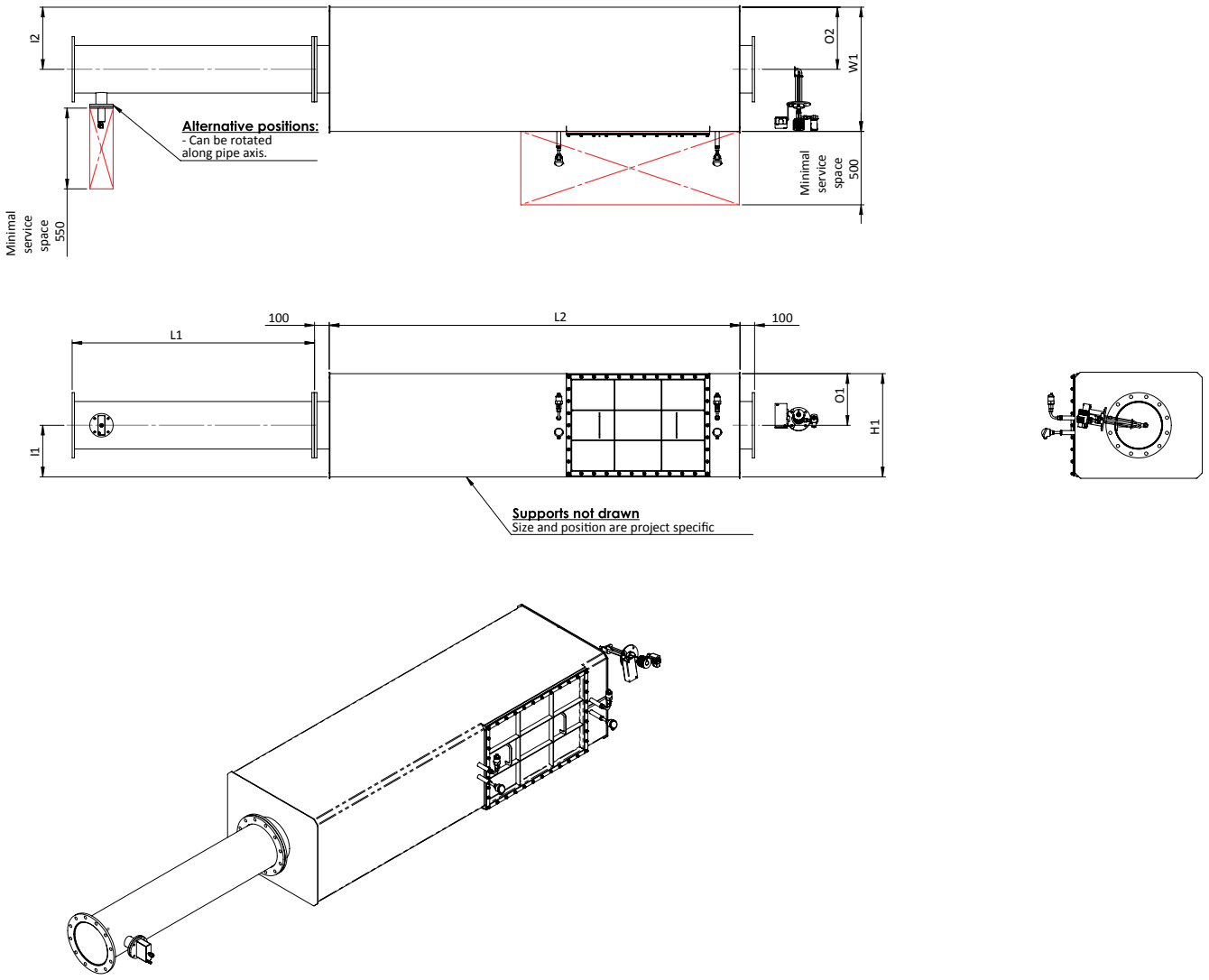

Note: This drawing is preliminary & provided for reference only and is not intended for installation purpose.
Contact us either your local distributor for detailed information

XEAMOS

Custom design is our standard

Custom SCR designs are meant to be “first time right”. With in-house developed calculation models and the aid of FEM and CFD software we can predict the performance of our systems up front and thus eliminate risk. Field experience and test bed testing have proven that our models are more than accurate.

Mechanical design is essential for systems that are subject to high internal pressures or pressure fluctuations. Fatigue and temperature effects are taken into account to determine the maximum material stress.

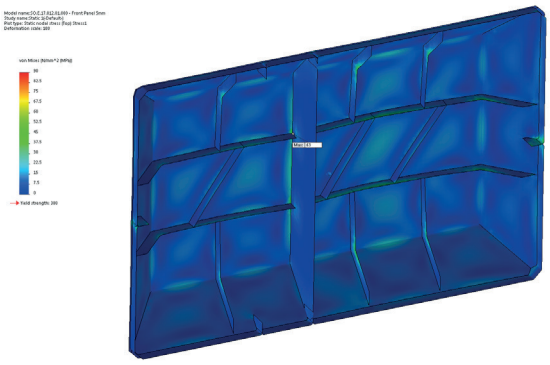

The acoustic performance of Xeamos ZeroNox systems is tuned for each specific engine. A smooth attenuation curve is achieved across the frequency spectrum.

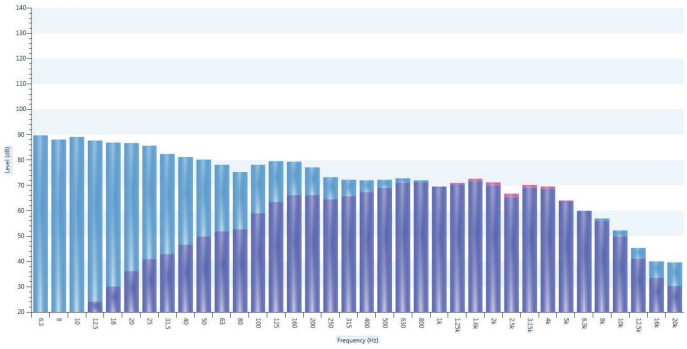

With knowledge of the chemical reaction rates of specific catalyst types the catalyst geometry is calculated for each specific engine and application.

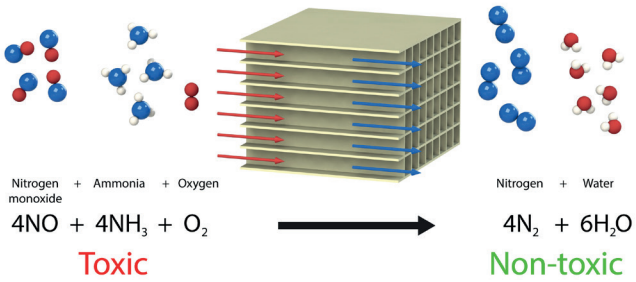

In many systems the back pressure needs to be accurately calculated. Using CFD software a “mbar” accuracy can be achieved.

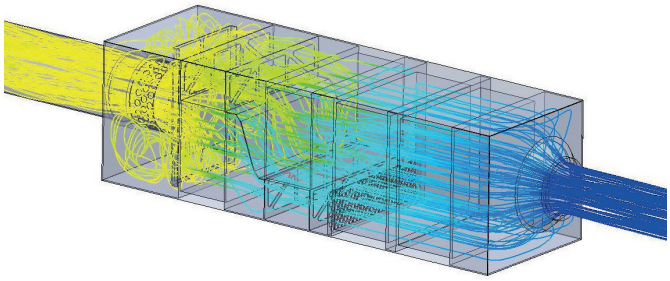

The distribution of urea across the catalyst bed is essential for the performance of an SCR system. A good distribution results in optimized catalyst volume and prevents NH3 slip

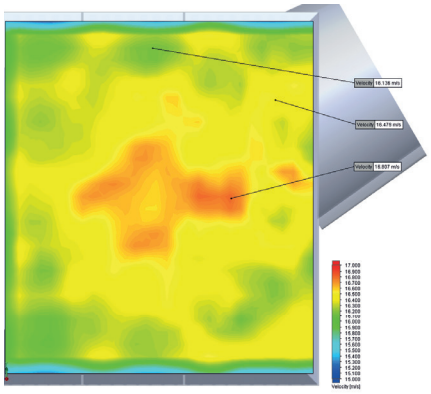

XEAMOS
Bijsterhuizen 2416 | 6604 LL Wijchen | The Netherlands
+31 (0)246 486 015 | info@xeamos.com

xeamos.com

Edition 2021-09
Zero NOx